ITEM NO.	QTY	PART NUMBER	DESCRIPTION
1	1	MS-RSC-0.5-01-00	BODY
2	4	MS-DC-0.5-08-00	LEG
3	12	MS-DSC-0.5-03-00	DRAWER
4	1	MS-10-01	OPTIONAL CABINET TOP

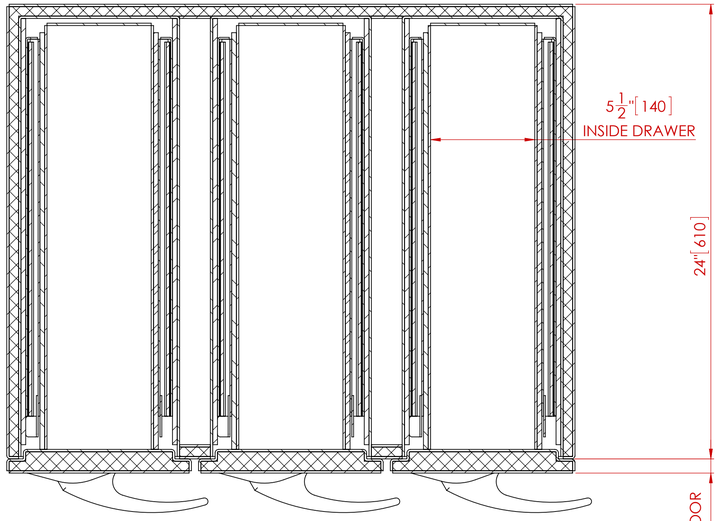

SECTION C-C

CUSTOMER APPROVAL ENDORSEMENT

☐ APPROVED AS SHOWN

☐ APPROVED WITH CHANGES SHOWN

BY: DATE:

TITLE:

COMPANY:

COMMENTS:

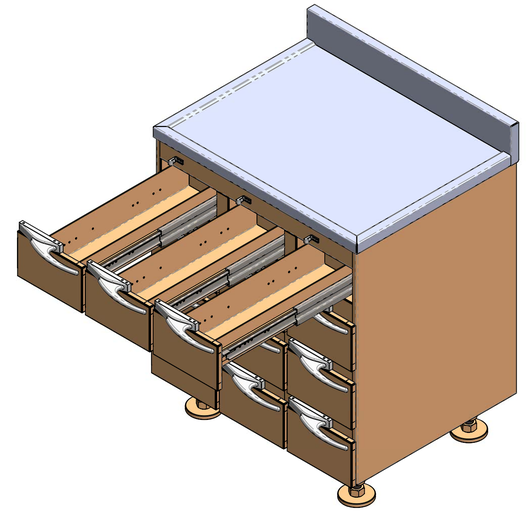

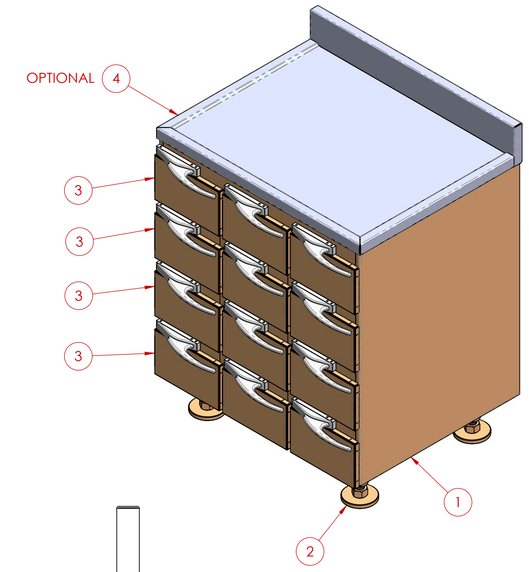

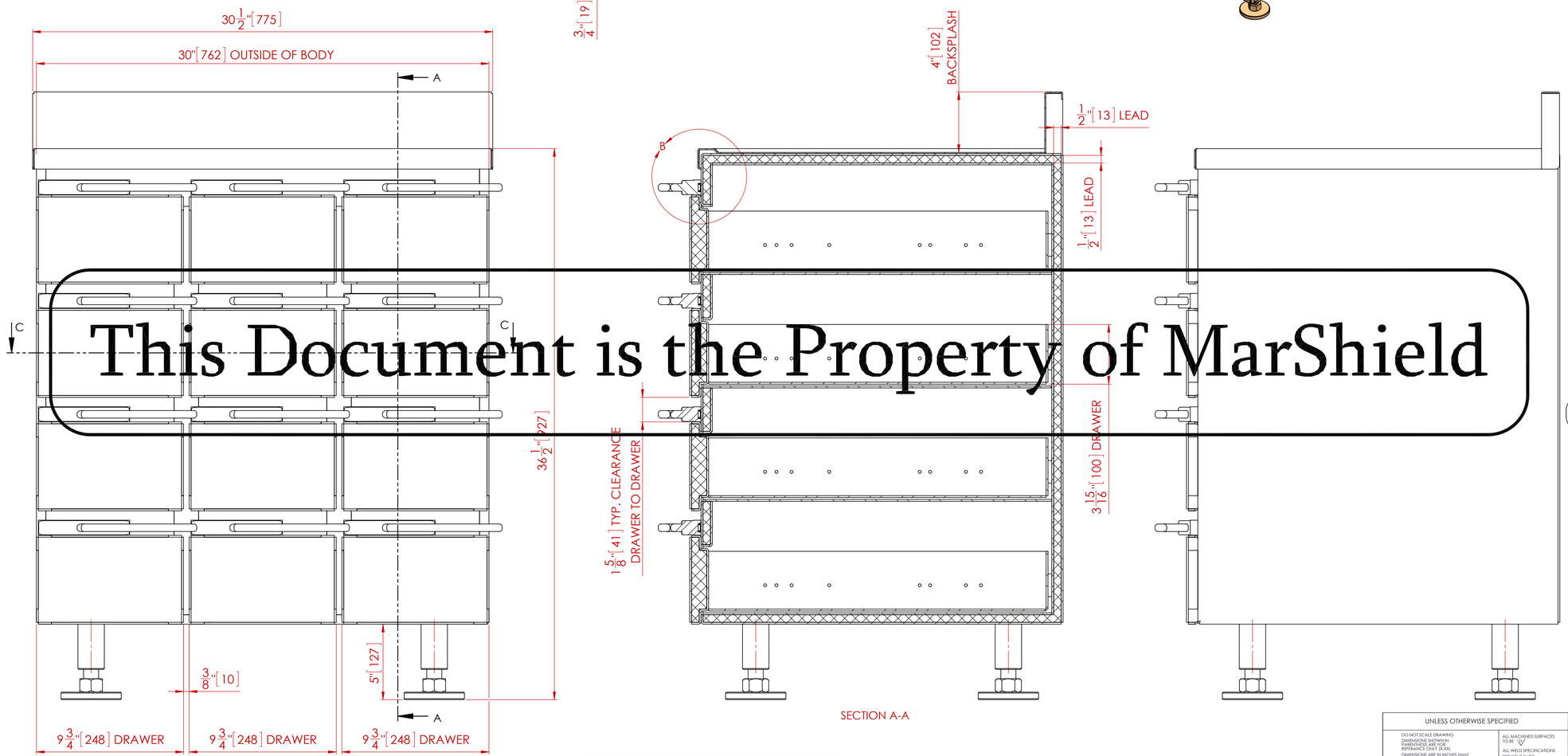

SECTION A-A

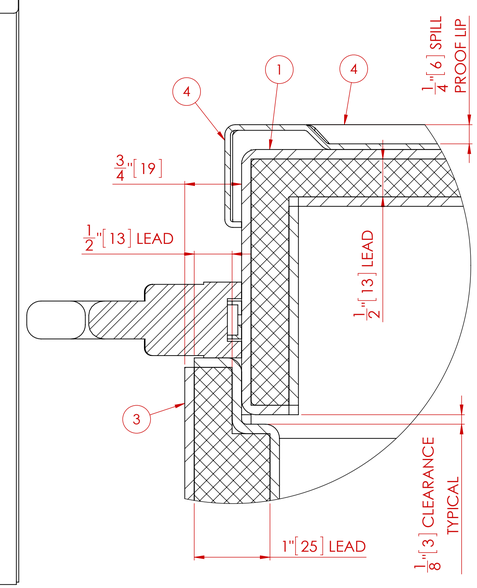

DETAIL B
SCALE 1 : 1

This Document is the Property of MarShield

NOTES:

1. ALL UNITS ARE INCHES [mm] UNLESS OTHERWISE SPECIFIED
2. ITEM 4 (CABINET TOP) IS OPTIONAL

TOTAL LEAD WEIGHT	TOTAL CABINET WEIGHT (INCLUDING LEAD)
1,035 LBS. (470 kg)	2,145 LBS. (975 kg)

REV.	DESCRIPTION	DATE	APPROVED
B	ADDED WEIGHTS TABLE	2/27/2013	M.S.D.
A	RELEASED FOR CUSTOMER REVIEW & APPROVAL	1/17/2013	M.S.D.

REVISIONS

UNLESS OTHERWISE SPECIFIED

DO NOT SCALE DRAWING
DIMENSIONS SHOWN IN FRACTIONS ARE FOR REFERENCE ONLY (X.XX)
DIMENSIONS ARE IN INCHES [mm]
TOLERANCES APPLY AS SHOWN BELOW
X = ± 0.030
.XX = ± 0.010
.XXX = ± 0.005
FRACTIONS = ± 1/16
ANGLES = ± 0.5°

ALL MACHINED SURFACES 150 RMS

ALL WELD SPECIFICATIONS PER WELD SHOP

SolidWorks MAINTAINED DATA CHANGES SHALL BE INCORPORATED ELECTRONICALLY BY THE DESIGN ACTIVITY.

MODEL NUMBER

PROPRIETARY
NO PART OF THIS DOCUMENT MAY BE REPRODUCED, STORED IN A RETRIEVAL SYSTEM, OR TRANSMITTED IN ANY FORM, WITHOUT THE WRITTEN PERMISSION OF MarShield - Mars Metal Company DIVISION OF Marswell Metal Industries Ltd.

MarShield Custom Radiation Protection, Shielding and Storage

TITLE RADIOISOTOPE STORAGE CABINET ASSEMBLY

CUSTOMER/DEALER

DRAWN BY	M.S.D.	DATE	1/16/2013
CHECKED BY		DATE	
APPROVED		DATE	

SIZE D | DRAWING NO. MS-RSC-0.5-30.5-24-36.5 | REVISION B

SCALE 1:4 | WEIGHT | SHEET 1 OF 1